HYDRA KOOL™

Dual-Temp Islands HKI-DT Series

Installation & Technical Data

Self-Contained Bunker Merchandiser

AUGUST 2026

HKI-DT-60-S **HKI-DT-80-S** **HKI-DT-100-S**

Low & Medium Temperature · Air-Cooled · R-290

MVP GROUP
www.mvpgroupcorp.com

NEMA 6-20P

Certifications

Intertek Intertek

Unit Dimensions

HKI-DT-60-S	
Temperature Range	-10°F to 42°F
Voltage (6-20P Plug)	**220V – 60Hz**
Rated Current (A)	6.7 – Defrost 9.1
Refrigerant	R290 / 2 × 90 oz
Compressor / HP	2 – NEU2178U / 1 HP
Net Weight (lbs.)	584

HKI-DT-80-S	
Temperature Range	-10°F to 42°F
Voltage (6-20P Plug)	**220V – 60Hz**
Rated Current (A)	7.2 – Defrost 11.2
Refrigerant	R290 / 2 × 120 oz
Compressor / HP	2 – NEU2178U / 1 HP
Net Weight (lbs.)	705

HKI-DT-100-S	
Temperature Range	-10°F to 42°F
Voltage (6-20P Plug)	**220V – 60Hz**
Rated Current (A)	7.4 – Defrost 16
Refrigerant	R290 / 2 × 130 oz
Compressor / HP	2 – NEU2178U / 1 HP
Net Weight (lbs.)	950

We reserve the right to change or revise specifications and product design in connection with any feature of our products. Such changes do not entitle the buyer to corresponding changes, improvements, additions or replacements for equipment previously sold or shipped.

Location

These merchandisers are designed for displaying products in air-conditioned stores where temperature is maintained at or below 75°F and relative humidity is maintained at or below 55%.

Placing refrigerated merchandisers in direct sunlight, near hot tables or near other heat sources could impair their efficiency. Like other merchandisers, these merchandisers are sensitive to air disturbances.

For the equipment's proper installation, check if it is placed on an even surface and not near sources of heat and/or direct solar radiation or near doors, windows, fans, and vents.

Allow for a minimum of 6" clearance from walls, merchandisers, and any other large objects near the merchandiser's vented base panels. Blocking or restricting air flow will adversely affect performance and may damage the refrigeration system.

Product should always be maintained at proper temperature. This means that from the time the product is received, through storage, preparation and display, the temperature of the product must be controlled to maximize the life of the product.

Field Wiring

Field wiring must be sized for component amperes stamped on the serial plate. Actual ampere draw may be less than specified. Always use a certified electrician to field wire your merchandiser.

Electrical Connections

All wiring must follow NEC and all local codes.

Electrical Outlet

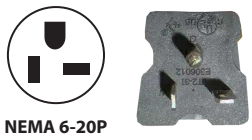

NEMA 6-20P

All 220-volt models are provided with a factory installed, UL approved 20-amp power cord and NEMA 6-20P plug. To ensure proper operation, this equipment must be plugged into a NEMA compatible, grounded receptacle that can supply the full voltage and amperage stated on the serial plate.

Before connecting or powering the merchandiser, use a voltmeter to verify that the power source provides 100% of the unit rated voltage. Failure to verify the correct supply voltage before startup will void the warranty.

Do not use an extension cord. Each merchandiser must be connected to its own dedicated electrical circuit. Do not connect more than one merchandiser to the same electrical circuit.

- Always use a dedicated circuit with the amperage stated on the unit.
- Do not overload the circuit.
- Do not use long or thin extension cords. Never use adapters.

Advise owner/operator that merchandiser must operate at temperature for 24 hours prior to loading with product.

Legal Disclaimer

MVP GROUP shall not be liable for any repairs or replacements made without the written consent of our Technical Support Team, or when the product is installed or operated in a manner contrary to the printed instructions covering installation and service which accompanied such product.

HKI-DT-60-S — Layout Drawing

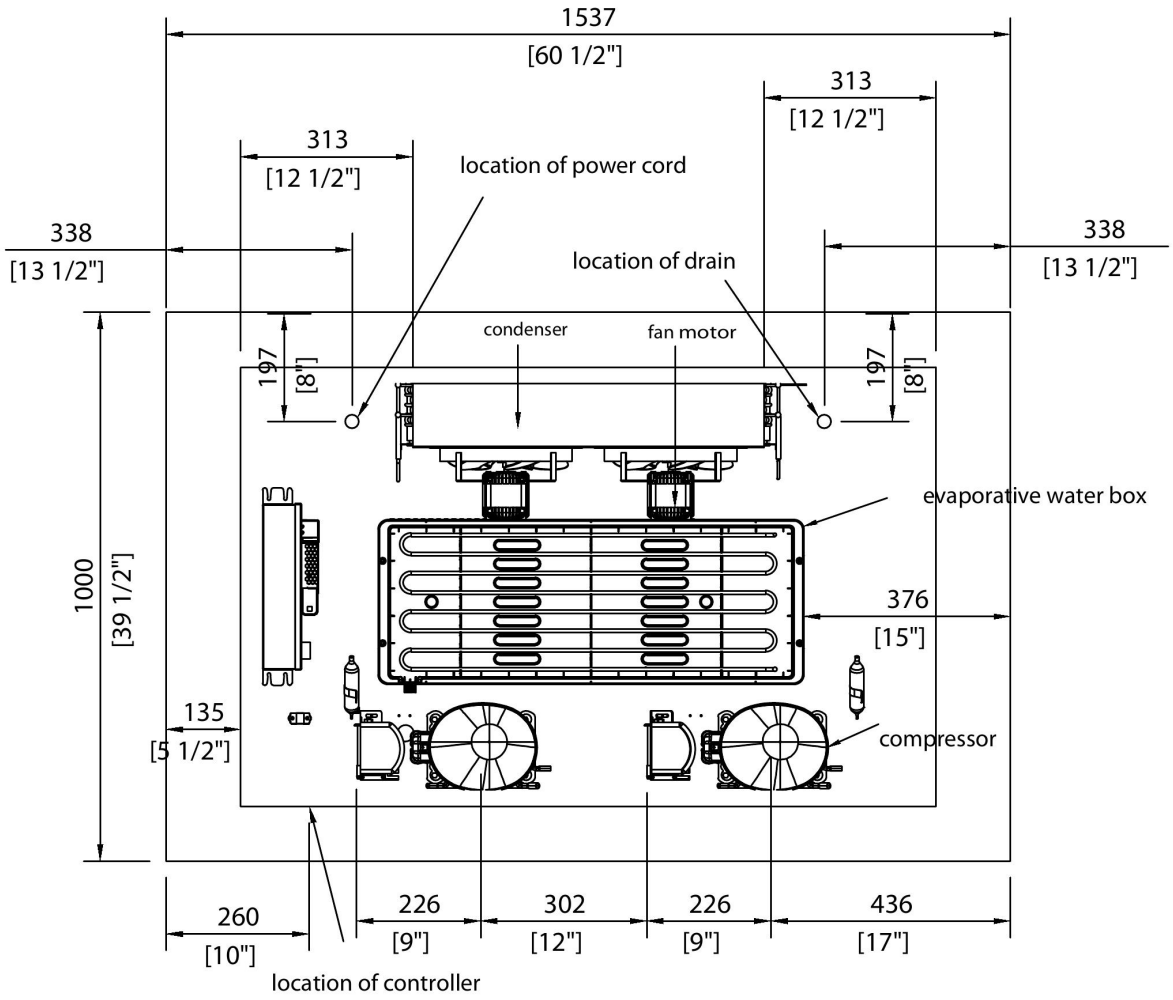

HKI-DT-80-S — Layout Drawing

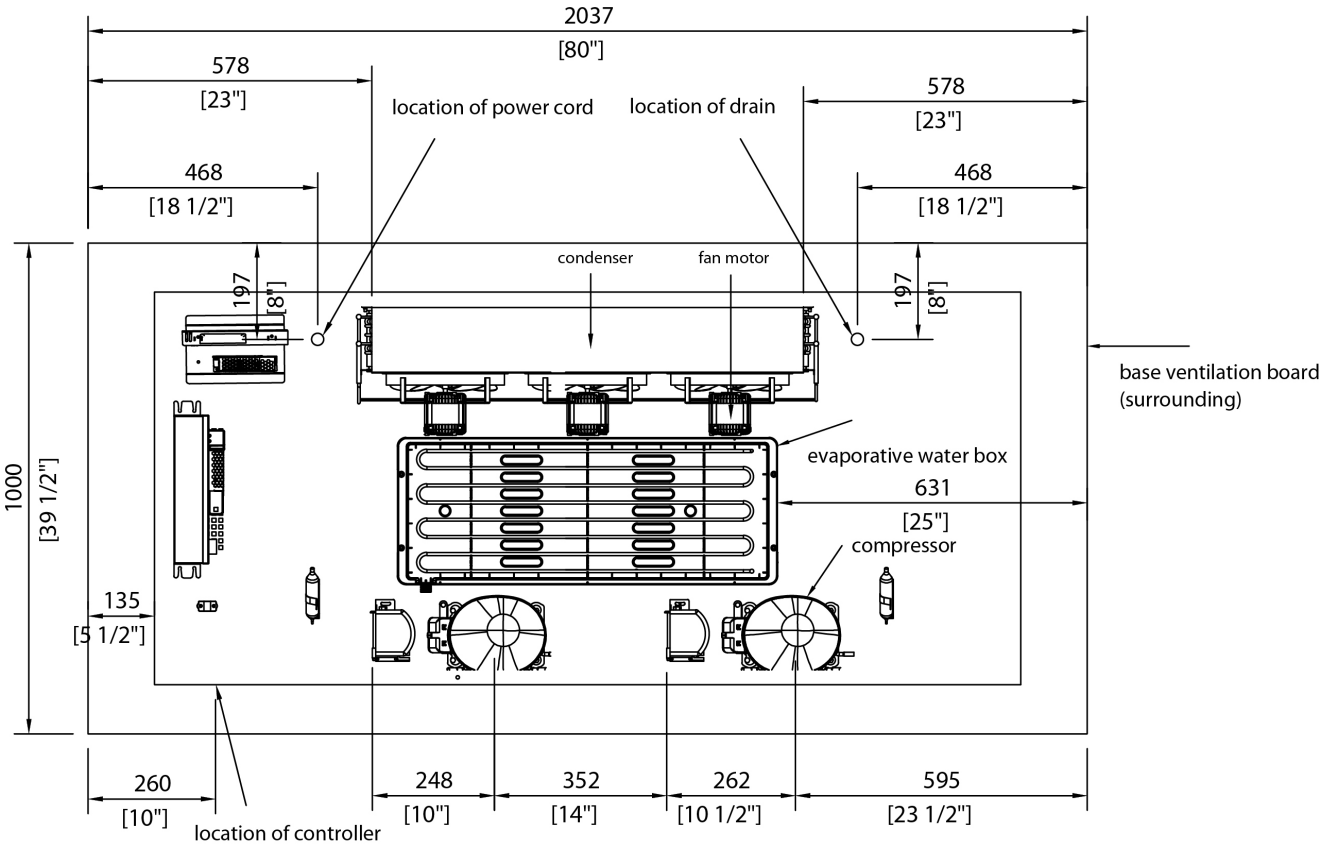

HKI-DT-100-S — Layout Drawing

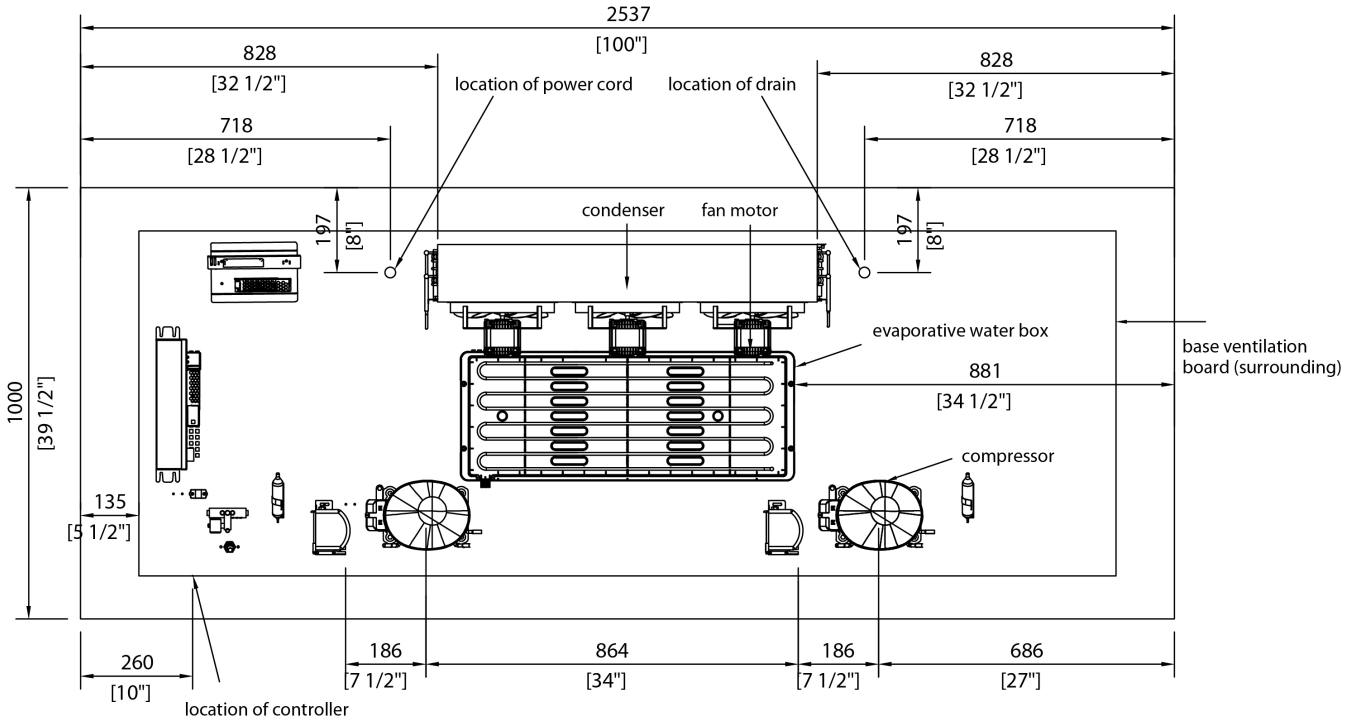

One Year Parts & Labor Warranty

MVP Group (HYDRA-KOOL) warrants to the original purchaser of every new HYDRA-KOOL refrigerated unit to be free from defects in material or workmanship, under normal and proper use and maintenance service as specified by MVP Group and upon proper installation and start-up in accordance with the instruction packet supplied with each unit. MVP Group obligation under this warranty is limited to a period of one (1) year from the date of original installation.

Any original part covered under this warranty that are determined by MVP Group to have been defective within one (1) year of original installation shall be limited to the repair or replacement, including the labor charge for defective parts or assemblies. The labor warranty shall include standard straight time labor charges only and reasonable travel time, as determined by MVP Group.

Warranty shall not cover standard wear and tear parts which include door gaskets, incandescent bulbs, LED lamps, or fluorescent bulbs. Warranty also does not cover issues caused by improper installation or lack of basic preventative maintenance which includes, but not limited to regular cleaning of condenser coils.

Additional Four Year Compressor Warranty

In addition to the one (1) year warranty stated above, MVP Group hereby warrants its hermetically and semi-hermetically sealed compressors to be free from defects in both material and workmanship under normal and proper use and maintenance service for a period of four (4) additional years from the date of original installation, but shall at no times exceed five (5) years after shipment from the manufacturer.

Compressors determined by MVP Group to have been defective within this extended time period will, at MVP Group option, be either repaired or replaced with a compressor or compressor parts of a similar capacity.

The four (4) year extended compressor warranty applies only to hermetically and semi-hermetically sealed parts of the compressor and does not apply to any other parts or components, including, but not limited to: cabinet, paint finish, temperature control, refrigerant, metering device, driers, motor starting equipment, fan assembly or any other electrical component, etc.

This part and labor warranty is the sole warranty policy offered by MVP Group. MVP Group sole obligation under this warranty is limited to either repair or replacement of parts and is subject to the limitations listed below.

1. MVP Group will bear no responsibility or liability for any equipment which has been misapplied, mishandled, misused, subjected to harsh chemical action, or external causes such as the use of extension cords, electrical power fluctuations, lack of proper maintenance, non-factory approved revisions or modifications, or equipment damaged by fire, flood, or other acts of God.
2. MVP Group will bear no responsibility for consequential loss or damages such as, including but not limited to, economic loss, profit loss, personal injury, property damage, damage during transit, losses or damages arising from food or product spoilage claims.
3. MVP Group shall bear no responsibility for parts or labor coverage for component failure or other damages resulting from improper usage, installation, or maintenance as described in the owner's manual.
4. Exceptions to 1 (1) year part warranty other than additional four (4) year compressor warranty: Light bulbs and door gaskets are limited to 90 day warranty period, parts only.
5. MVP Group equipment is intended for commercial use only and this warranty is void if the equipment is installed in other than commercial applications.
6. All other warranties, either express or implied, arising under law or equity or custom of the trade, including but not limited to, warranties or merchantability or fitness for a particular purpose, are excluded. MVP Group's liability on any claim, including but not limited to negligence, shall not exceed the price of the equipment that gives rise to the claim. HYDRA-KOOL is a registered trademark of MVP Group.

HYDRA KOOL™

MVP GROUP

www.mvpgroupcorp.com

Tel.: 786.600.4687 / Toll Free: 888.275.4538

sales@mvpgroupcorp.com
service@mvpgroupcorp.com

www.mvpgroupcorp.com

AUGUST 2026

© MVP Group. All rights reserved. Specifications subject to change without notice.